DR110 SERIES

Gas and Water High Flow Low Pressure Regulators

This catalogue is revised and/or updated as of Jan. 2024 and supersedes any old ones.
이 카다록은 2024년 1월에 개정 또는 업데이트 되었으며 이전의 카다록을 대체합니다.

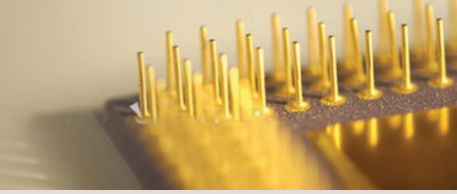

FUNCTIONAL SCHEMATIC

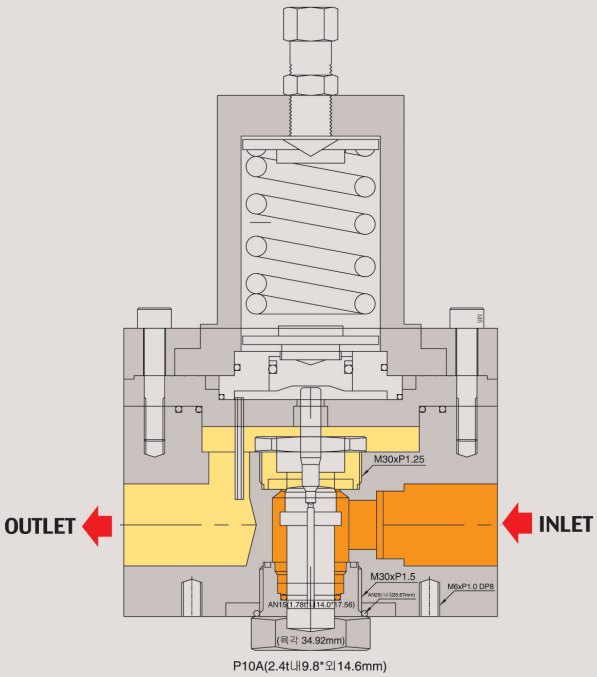

FLOW CHART

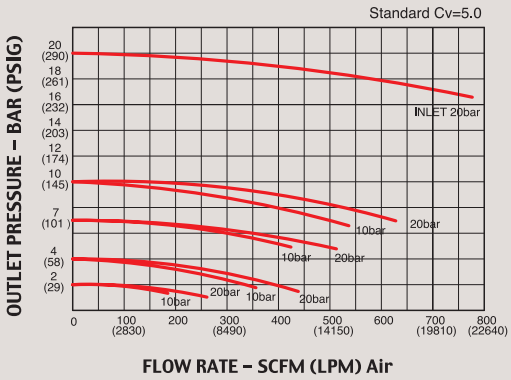

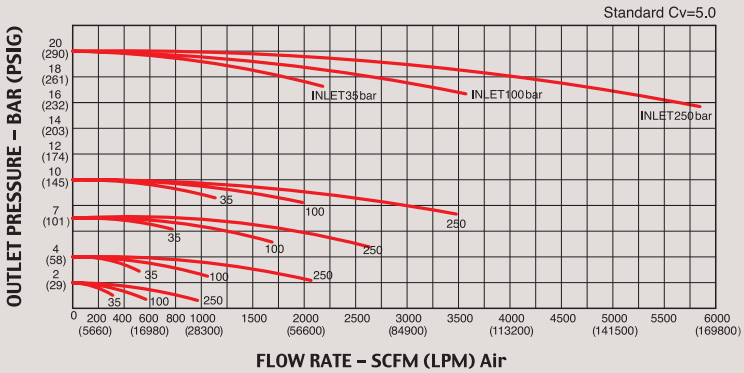

DR110 High Flow, Single-Stage NPT type ~~1/2″~~, 3/4″, 1″

Cv 5.0의 고유량 제품으로 일반적인 산업용 가스는 물론 일반 물 또는 초 순수 라인 등에 최적의 제품

- 316L Stainless Steel or Nickel-plated Brass Body
- Cv 5.0의 고유량 제품이며 가스, 물 등의 사용환경에서 내구성과 안전성이 뛰어남.
- 설치 환경에 따라 Tube 및 Flange를 옵션으로 선택 가능함.
- 전 부품은 CGA4.1 and ASTM G93 규정에 따라 세척하여 O^2 사용 가능한 Oil free 제품임.
- 클린라인 외의 경우 고장방지 및 수명 연장을 위해 별도의 필터사용 필수 권장.(gas 7㎛~15㎛, water 15㎛~80㎛)

Specifications

Inlet & Outlet Ports	3/4″, 1″ NPTF / Gauge port: 1/4″ NPTF F1=1/2″10k Flange / T1 = 1/2″Tube F2 = 3/4″20k Flange / T2 = 3/4″Tube F3 = 1″30k Flange / T3 = 1″Tube
Body	316L Stainless Steel / Nickel-plated Brass
Bonnet	Aluminum #2024
Diaphragm	Teflon / Piston type (316L SS)
Main Valve	316L SS
Valve Spring	316L SS
Valve Seat	Teflon / Vespel
Maximum Inlet Pressure (bar/psi)	L = 41.4bar (600psi / 316L SS & Brass), BS = 100bar (1,450psi / Brass), S= 150bar (2,175psi /316L SS), H = 250bar (3,625psi / 316L SS), U = 350bar (5,075psi / 316L SS)
Outlet Pressure/bar (psi)	2(29), 4(58), 7(102), 10(145), 20(290), 40(580), 70(1,015), 100(1,450), 150(2,175 / *SS only), 200(2,900psi / *SS only)
Design Proof Pressure	150% of rated capacity
Leakage	Internal: Bubble-tight / External: $\leq 2x10^{-8}$ atm cc/sec He
Operating Temperature	-40°C to +70°C(-40°F to +160°F) (Standard) H1:up to +120°C (option) H2:up to +250°C (option-Piston diaphragm type only) ∗ *피스톤 다이아후램 전용* H3:up to +320°C (option-Piston diaphragm type only) ∗ *피스톤 다이아후램 전용*
Flow Capacity (Cv)	5.0
Other Options	Pressure gauge, Flange, Tube, Panel Mounting Bracket, Wall Mounting Bracket
Net Weight (excl. gauge)	Approximately 6.5kgs

INSTALLATION DIMENSIONS

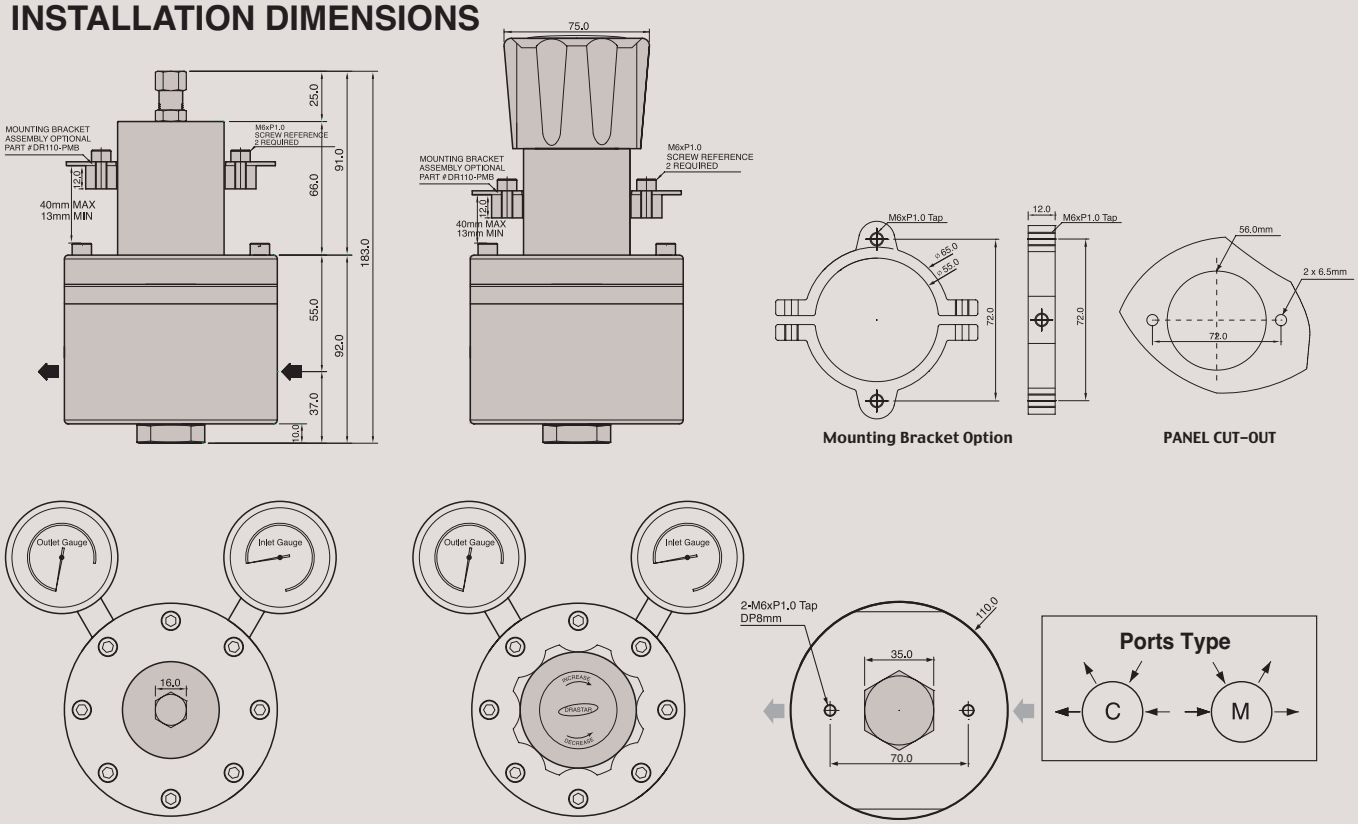

DR110 High Flow, Single-Stage NPT type ~~1/2″~~, 3/4″, 1″

- 316L Stainless Steel or Brass Body
- High-flow product of Cv 5.0 with excellent durability and safety in various applications of gases and water
- Tube and Flange options are available based on your installation requirement
- Cleaning : CGA 4.1. and ASTM G-93 for O^2 service / Oil-free
- Except for high purity gas lines, separate filtering is MUST (gas 7㎛~15㎛ water 15㎛~80㎛) for long life and failure prevention

Ordering Information

DR110	- SL	- 002	C	- N2	F2		- H1
Basic Series	Body Material & inlet Pressure Limit (bar/psi)	Outlet Pressure Range(bar/psi)	Port Type	Inlet & Outlet Ports Type & Size	Inlet & Outlet Flange & Tube Options	Self-venting	High Temperature
DR110 DR110= Bolt Type DR115= Knob Type 1/2″,3/4″1″ NPTF	SL=41.4/600 SS=150/2,175 SH=250/3,625 SU=350/5,075 *S=316L SS BL=41.4/600 *B=Brass	002 = 2/29 004 = 4/58 007 = 7/102 010 = 10/145 020 = 20/290 040 = 40/580 070 = 70/1,015 100 = 100/1,450 200 = 200/2,900	C=4 Ports M=4 Ports	N2= NPT 3/4″ N3= NPT 1″	F2=20k Flange F3=30k Flange T1=1/2″ Tube T2=3/4″ Tube T3=1″ Tube 316L or 304 SS	-Non-venting	H1 = 120°C H2 = 250°C H3 = 320°C Optional

※ Note:1) Push and lock handle is NOT compatible with DR110 series. / DR110 시리즈는 푸시 & 락 핸들 적용 불가.
2) 1/2″ Tube(O.D 21.7mm), 3/4″ Tube(O.D 27.2mm), 1″ Tube(O.D 34mm)

This catalogue is revised and/or updated as of Jan. 2024 and supersedes any old ones.
이 카다록은 2024년 1월에 개정 또는 업데이트 되었으며 이전의 카다록을 대체합니다.

DR110 SERIES PART LIST

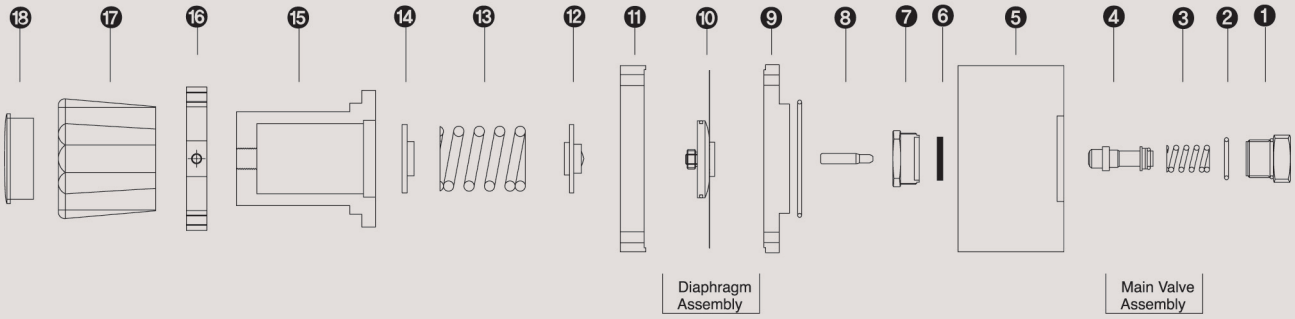

Series Part List (Standard Model)

Item No	Part Name	Part No. & Description
01	Cap Screw	DR110-01-01: 316L SS
02	Cap Screw O-ring	DR110-02-01: common
03	Valve Spring	DR110-03-01: 316L SS (standard) / 03-02: Hastelloy C-22 (option)
04	Main Valve Assembly	DR110-04-01: 316L SS (standard) / 04-02: Hastelloy C-22 (option)
05	Body	DR110-05-01: 316L SS / 05-02: Brass
06	Valve Seat	DR110-06-01: PFA (standard) / 06-02: Teflon, Polyimide (option)
07	Locking Screw	DR110-07-01: 316L SS
08	Main Valve Guide Pin	DR110-08-01: 316L SS
09	Flange #9	DR110-09-01: common
10	Piston Diaphragm Assembly	DR110-10-01: 2bar ~ 20bar (Teflon Diaphragm) / 10-02: 40bar ~ 70bar (Piston) 10-03: 100bar ~ 200bar (Piston)
11	Flange #15	DR110-11-01: common
12	Spring Plate	DR110-12-01: option (applicable only for 40bar~200bar/40bar~200bar *까지만 적용*)
13	Load Spring	DR110-13-01: 2bar / 13-02: 4bar / 13-03: 7bar / 13-04: 10bar / 13-05: 20bar / 13-06: 40bar / 13-07: 70bar / 13-08: 100bar / 13-09: 150bar / 13-10: 200bar
14	Pivot	DR110-14-01: common
15	Bonnet	DR110-15-01: common
16	Mounting Bracket	DR110-16-01: option
17	Control Knob	DR110-17-01: Knob type (DR115) / 17-02: Bolt type
18	Name Cap Plate	DR110-18-01: 2bar / 18-02: 4bar / 18-03: 7bar / 18-04: 10bar / 18-05: 20bar / 18-06: 40bar / 18-07: 70bar / 18-08: 100bar / 18-09: 150bar / 18-10: 200bar

※ Parts for H1, H2, H3 options: please contact www.drastar.com
(고온용 모델은 별도 문의: www.drastar.com)